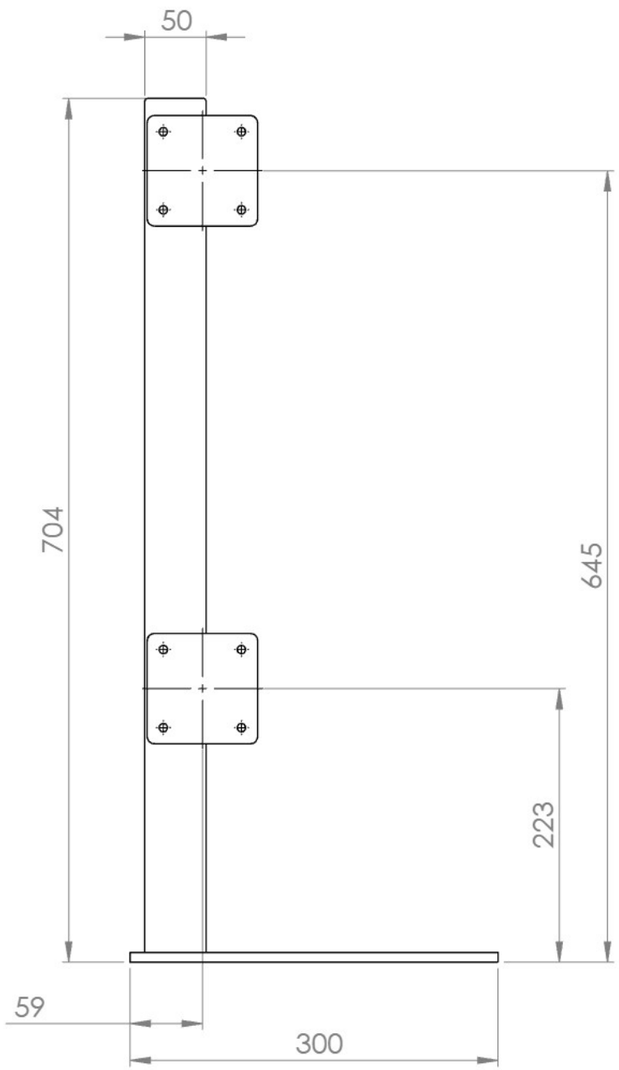

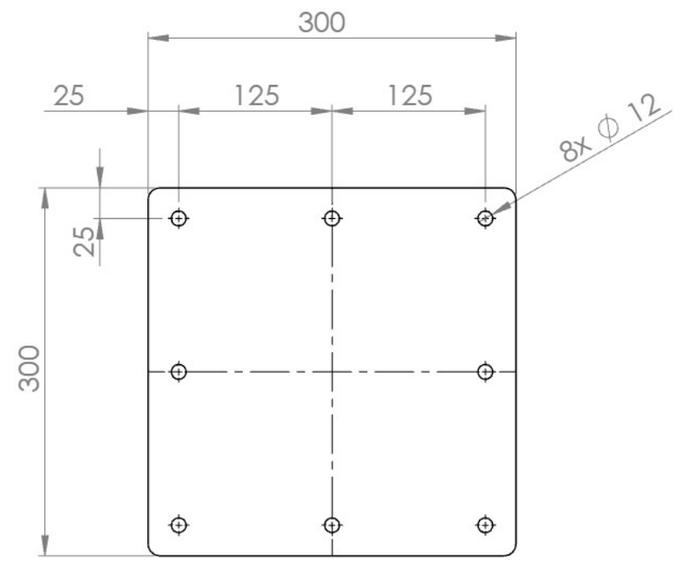

Footprint

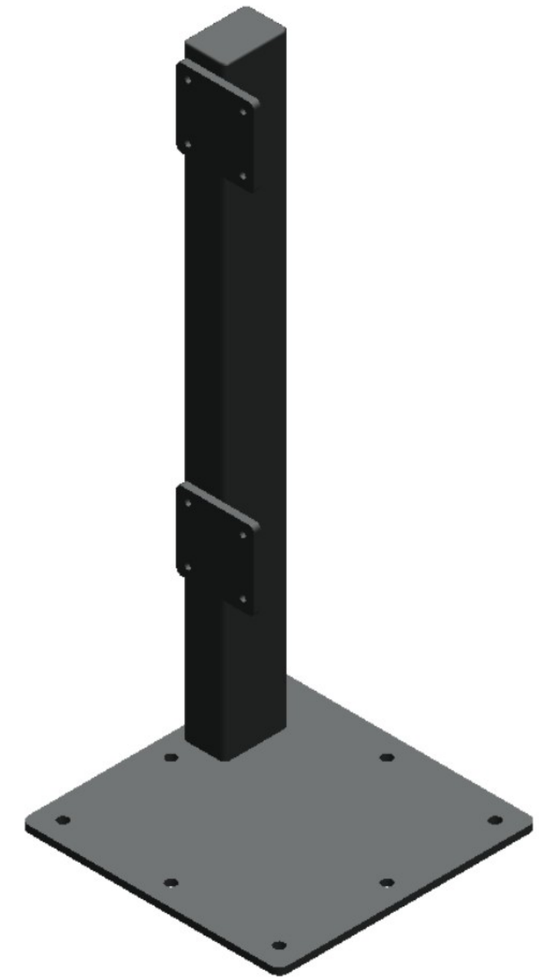

NOTE: This stacker suits 85.402.100 & 85.402.102 reels.

UNLESS OTHERWISE SPECIFIED: DIMENSIONS ARE IN MILLIMETERS SURFACE FINISH: TOLERANCES: LINEAR: ANGULAR:	FINISH: Powder Coated (Black)				DEBURR AND BREAK SHARP EDGES	
	NAME	SIGNATURE	DATE		REVISIONS	
DRAWN	Kishwar A		15/7/21		12/4/23	
CHK'D	Dominic R					
APPV'D	Daryl B					
MFG						
Q.A				MATERIAL: -		
				WEIGHT:		

PART NO. / PRC

125 85.402.109
Hose Stacker - Stand Only

DESCRIPTION: G.A. dwg

A3

SCALE:1:8

SHEET 2 OF 2